bananaHand

Assembly Guide

Parts List

1. Custom Components

a) Base Parts

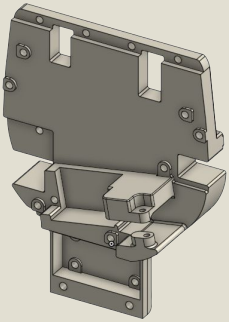

1x Hand Base

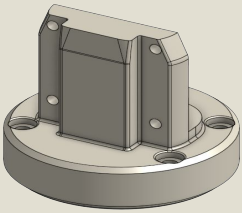

1x Wrist Mount

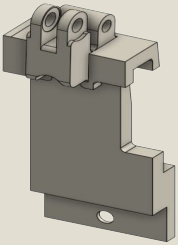

1x Middle Base

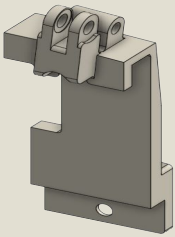

1x Index Base

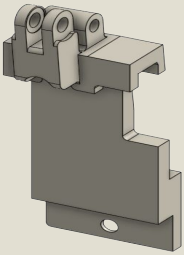

1x Pinky Base

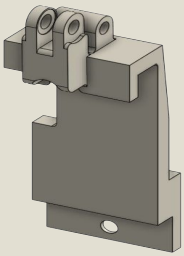

1x Ring Base

Parts List

1. Custom Components

b) Finger Parts

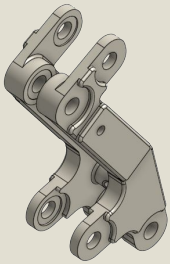

4x MCP-1

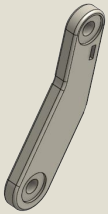

4x MCP-2

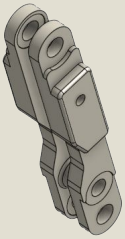

4x PIP-1

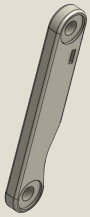

4x PIP-2

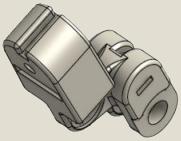

4x DIP-1

Parts List

1. Custom Components

c) Thumb Parts

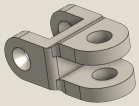

1x Clevis

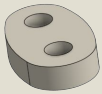

1x Clevis Link

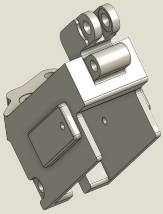

1x Thumb Base

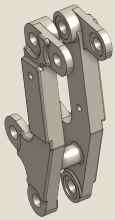

1x TM-1

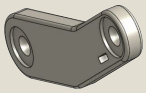

1x TM-2

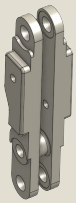

1x PIPT-1

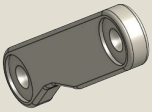

1x PIPT-2

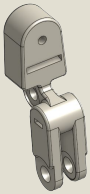

1x DIPT-1

Parts List

1. Custom Components

d) Shell Parts

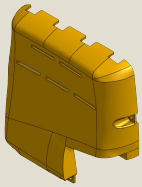

1x Palm Shell

1x Back Shell

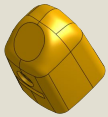

5x Fingertip

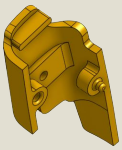

4x PIP-SHELL-A

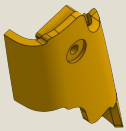

4x PIP-SHELL-B

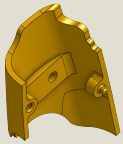

5x MCP-SHELL-A

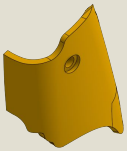

5x MCP-SHELL-B

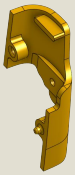

1x PIPT-SHELL-A

1x PIPT-SHELL-B

1x TM-SHELL-A

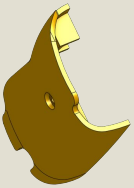

1x TM-SHELL-A

Parts List

2. Electronic Components

a) Actuators and PCB

5x ACTUONIX PQ-12 30:1 Linear Actuator

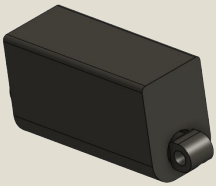

1x ACTUONIX PQ-12 63:1 Linear Actuator

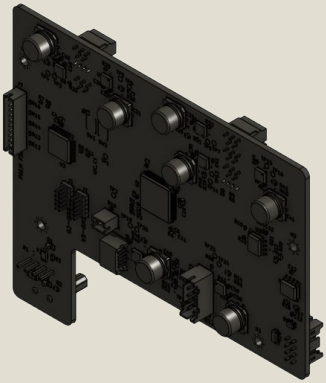

1x Custom PCB

Parts List

3. OTS Mechanical Components

a) Fasteners, Pins, Bushings and More

20x M3x6mm Socket Head

3x M3x12mm Socket Head

5x M3x14mm Socket Head

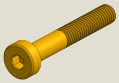

2x M3x20mm Socket Head

9x M3 Nylon Lock Nut

27x M2.5x5mm Self-Tap

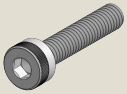

4x M4x20mm Socket Head

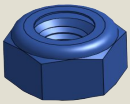

4x M4 Nylon Lock Nut

16x M3x4mm Heat Set Insert

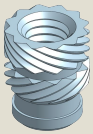

5x M3x6mm Heat Set Insert

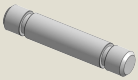

20x M3x10mm Clevis Pin

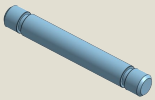

20x M3x16mm Clevis Pin

80x 3mm Shaft OD E-Clips

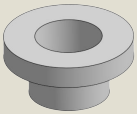

80x 3mm Shaft Bushing

80x M3 PTFE Washer

Finger Assembly

Finger Assembly

1. Attach PQ12 30:1 Actuator to Index Base using M3x14mm Socket Head + M3 Lock Nut

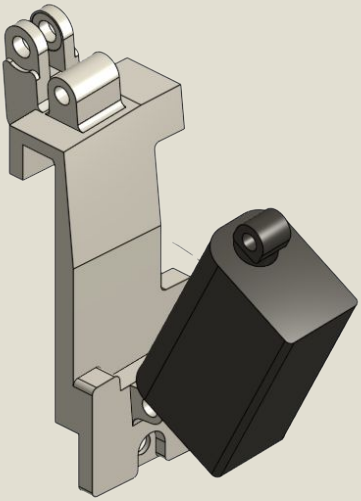

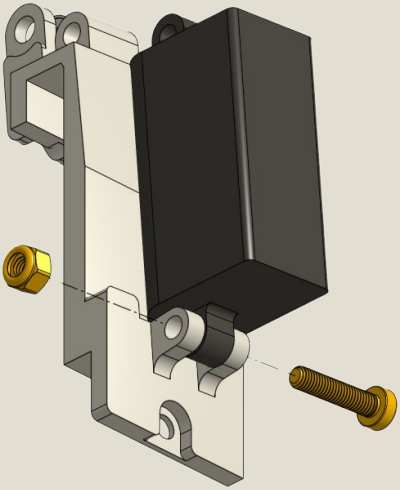

Finger Assembly

2. Attach MCP-1 to PQ-12 Actuator using 16mm Clevis Pin, E-Clip, Bushing, and Washer

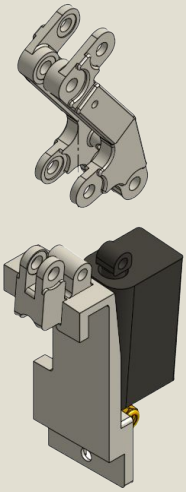

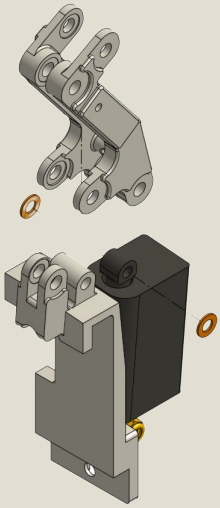

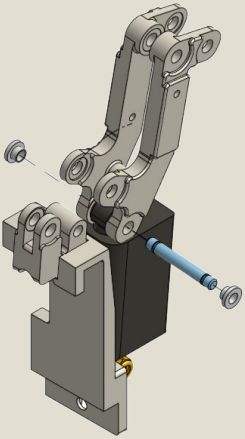

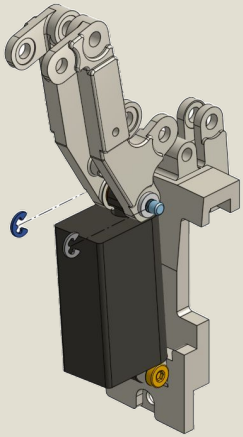

Finger Assembly

3. Use same hinge to attach MCP-1 and MCP-2 to Index Base

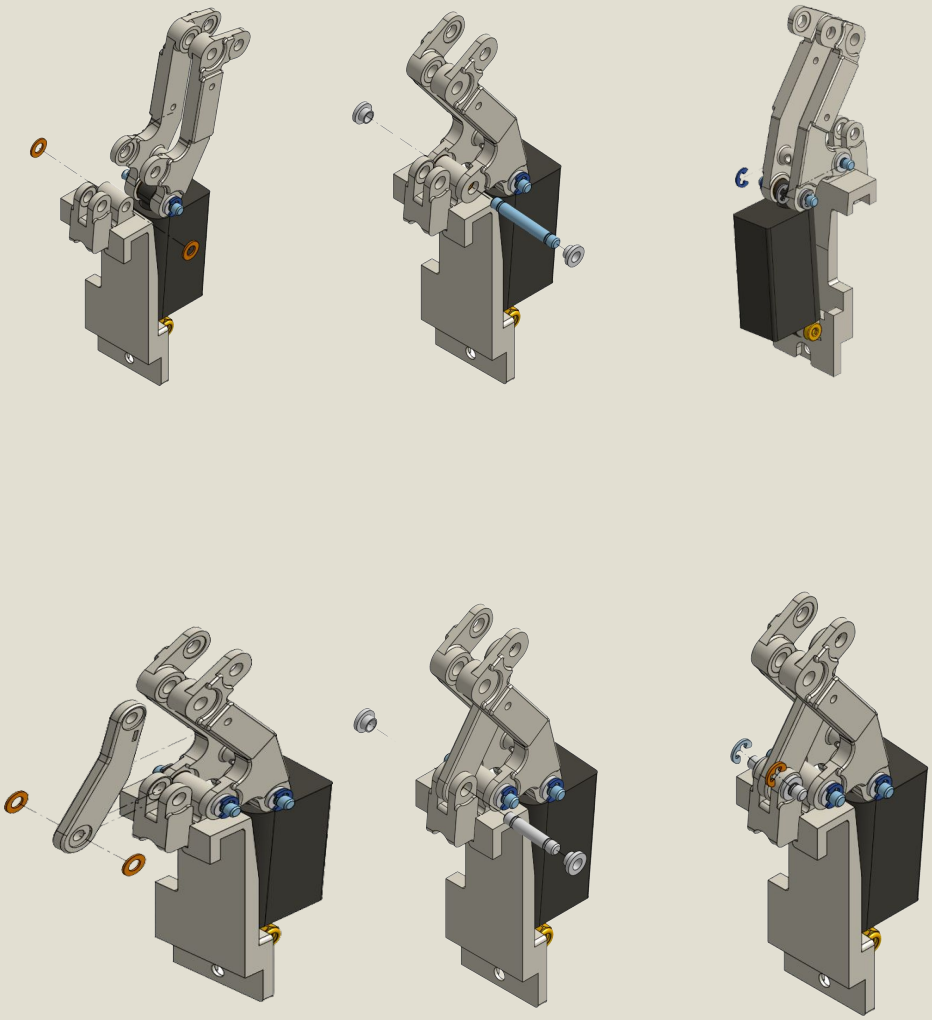

Finger Assembly

4. Attach PIP-1 to MCP-1 and MCP-2

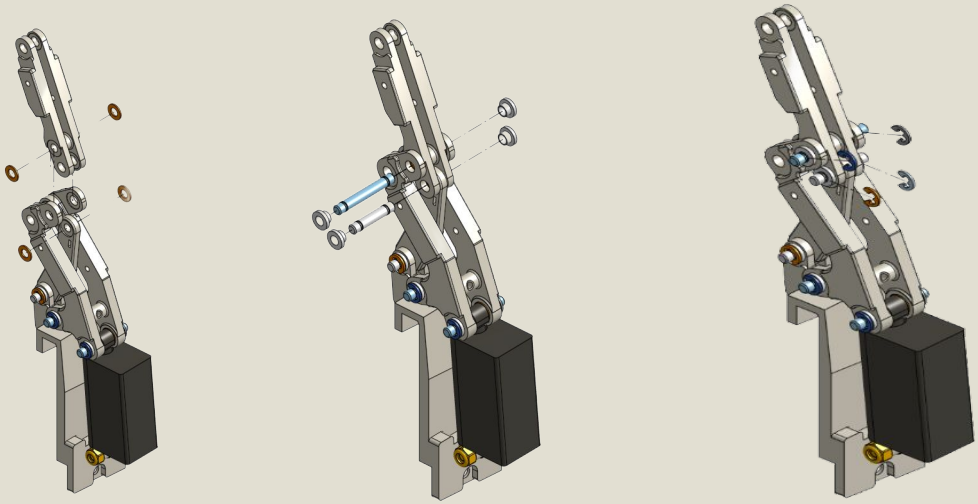

Finger Assembly

5. Attach PIP-2 to MCP-1

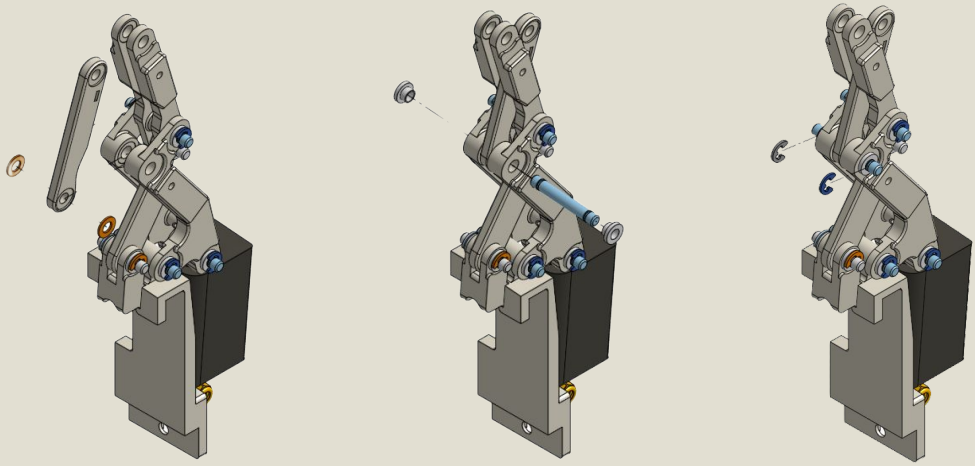

Finger Assembly

6. Attach DIP to PIP-1 and PIP-2

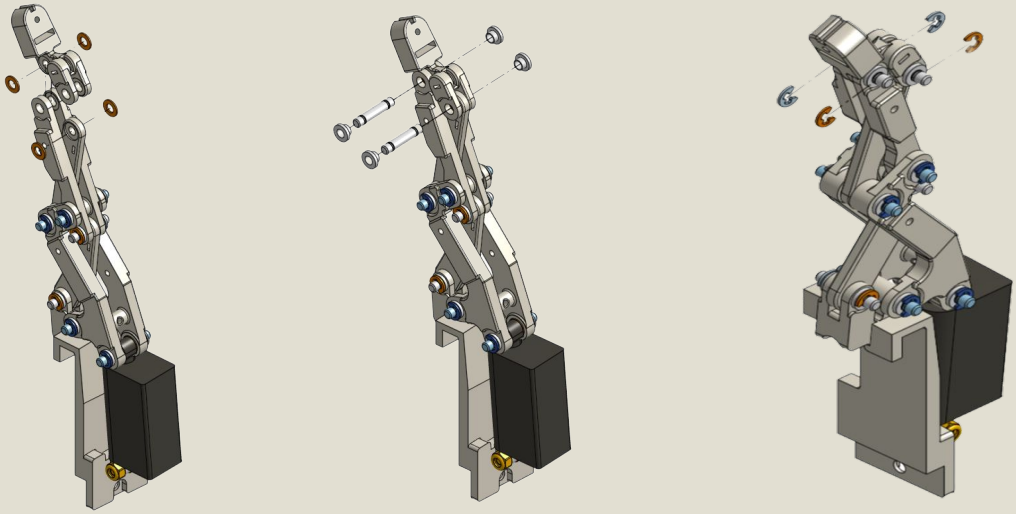

Finger Assembly

7. Attach Fingertip to DIP-1 using M2.5 Self-Tap

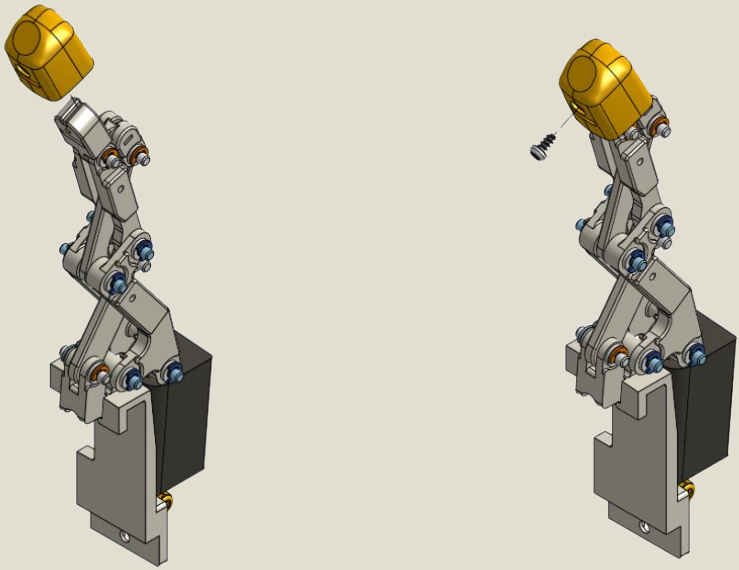

Finger Assembly

8. Attach PIP and MCP Shells

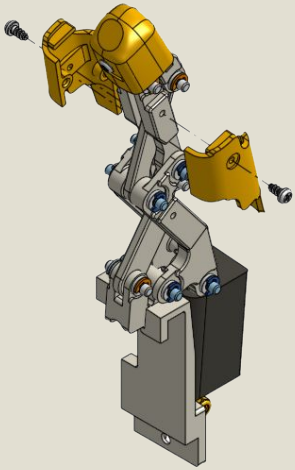

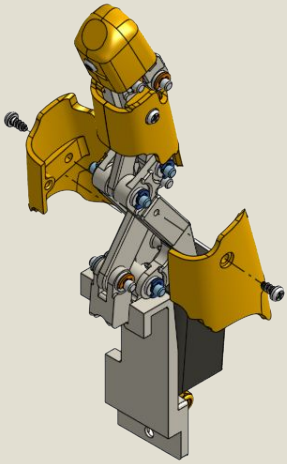

Finger Assembly

9. Completed Finger Assembly, repeat steps for Middle, Ring, and Pinky fingers

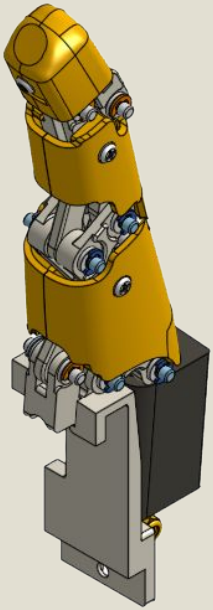

Thumb Assembly

Thumb Assembly

1. Attach Clevis to PQ-12 63:1 Actuator Piston using M3x14mm Socket Head and M3 Lock Nut

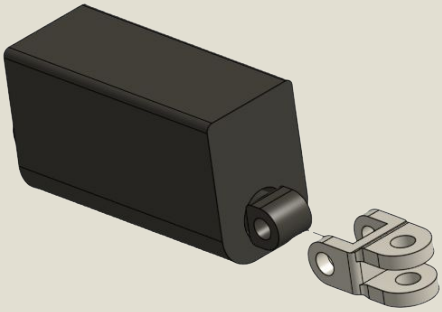

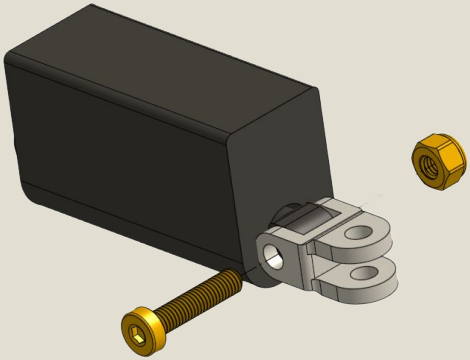

Thumb Assembly

2. Attach Clevis Link to Clevis using M3x12mm Socket Head and M3 Lock Nut

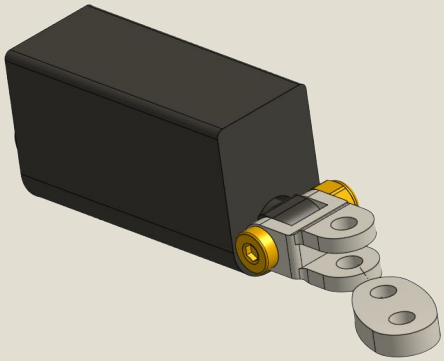

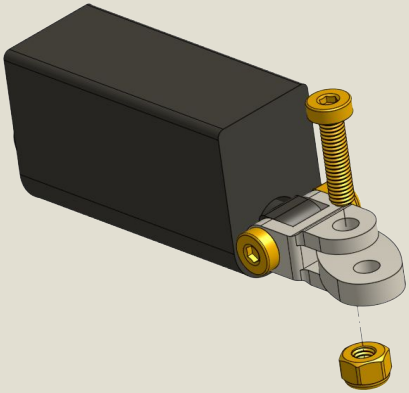

Thumb Assembly

3. Attach Thumb Base using M3x12mm Socket Head and M3 Lock Nut

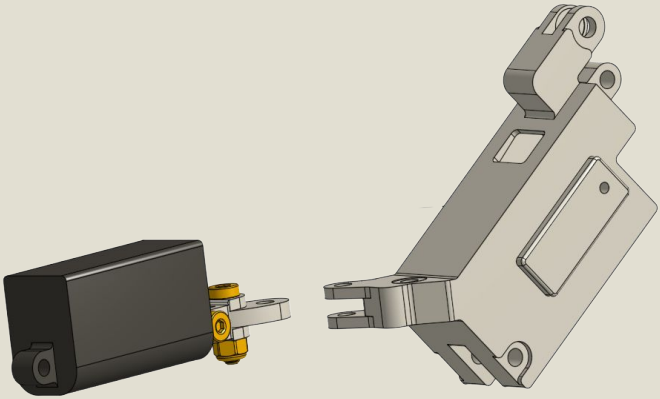

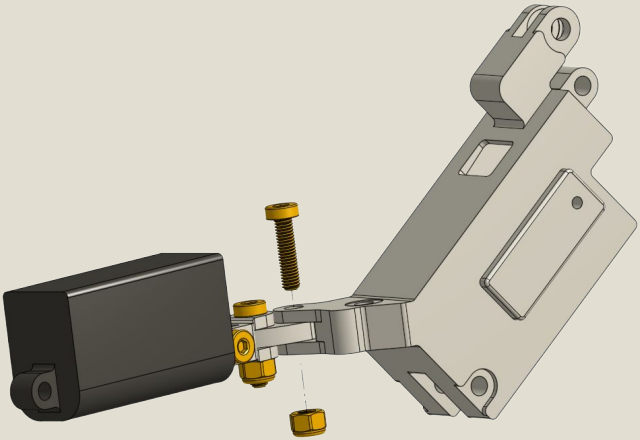

Thumb Assembly

4. Attach PQ-12 30:1 Actuator to Thumb Base using M3x20mm Socket Head and M3 Lock Nut

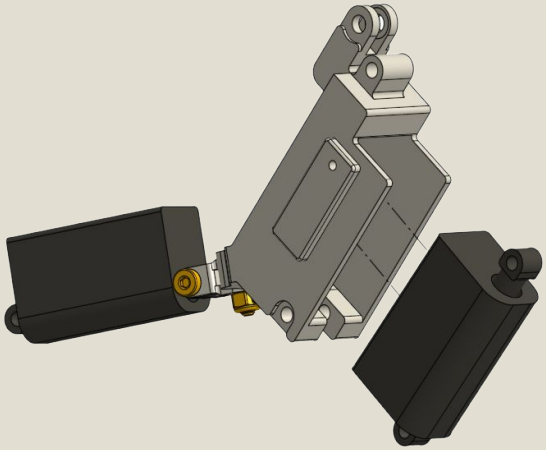

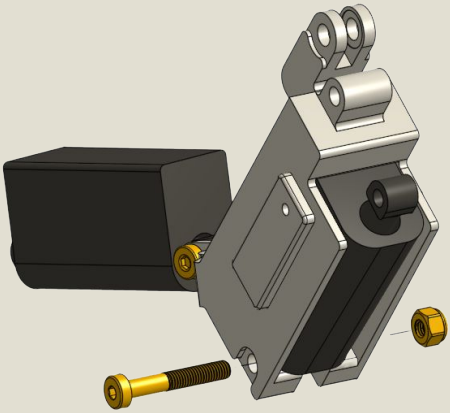

Thumb Assembly

5. Attach Thumb Linkage Mechanism to Thumb Base using same strategy as shown in Finger Assembly Steps 2-9

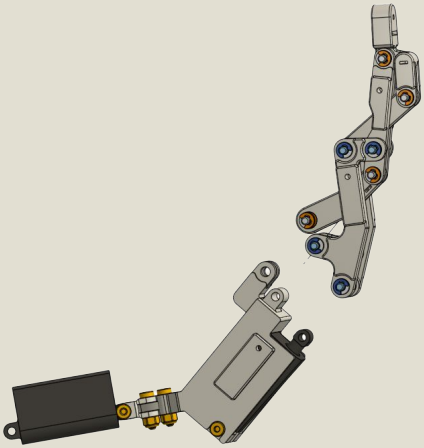

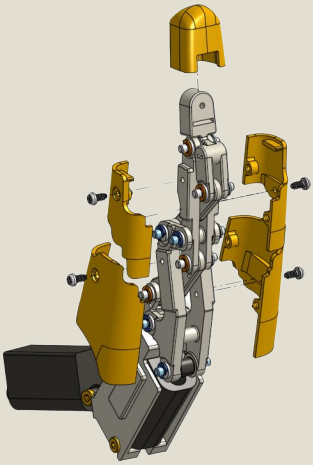

Thumb Assembly

5. Attach TM-SHELL to Thumb Base

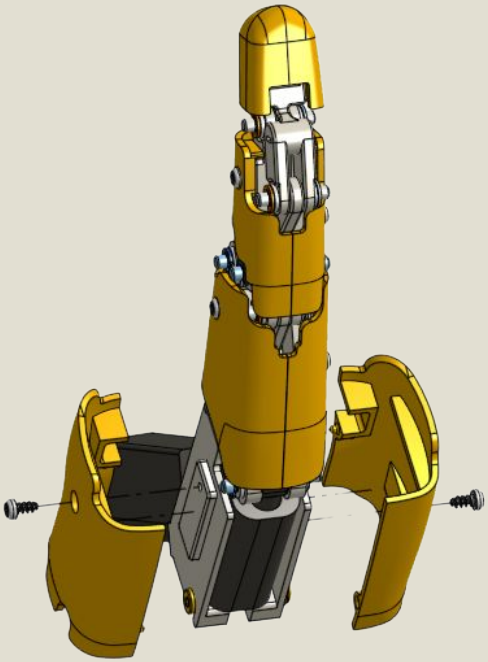

Thumb Assembly

6. Completed Thumb Assembly

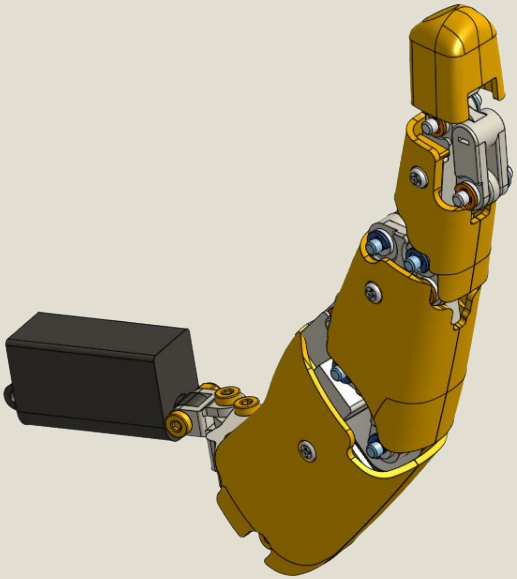

Main Assembly

Main Assembly

1. Add 4mm M3 Heat Set Inserts to Hand Base

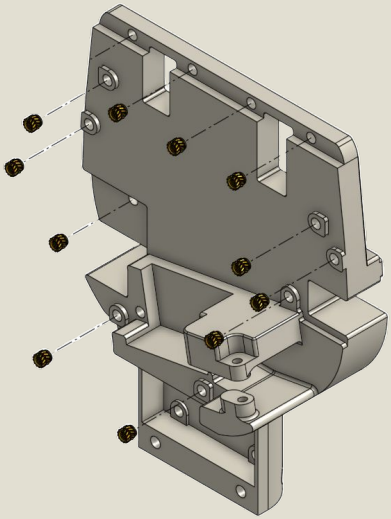

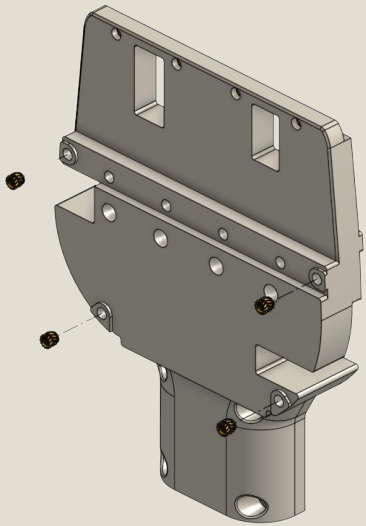

Main Assembly

2. Add 6mm M3 Heat Set Inserts to Hand Base

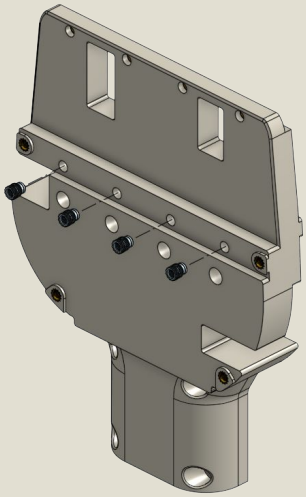

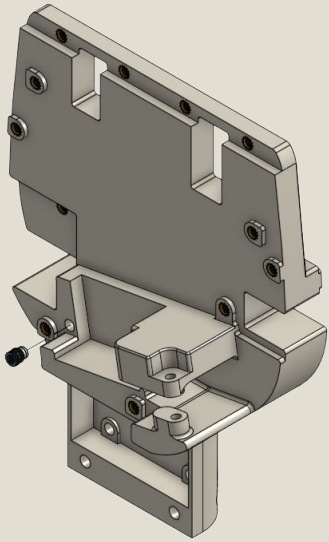

Main Assembly

3. Attach Finger Assemblies to Main Base using M3x6mm Socket Head

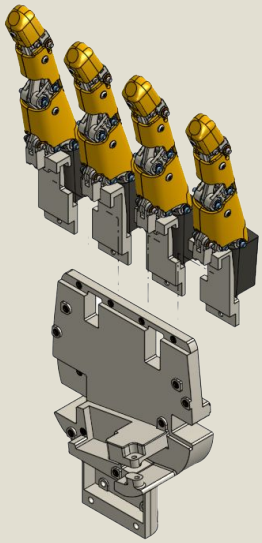

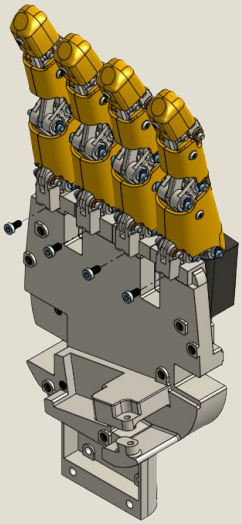

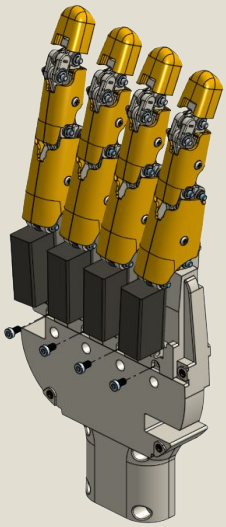

Main Assembly

4. Attach Thumb Assembly to Main Base using M3x12mm and M3x20mm Socket Head with M3 Lock Nut

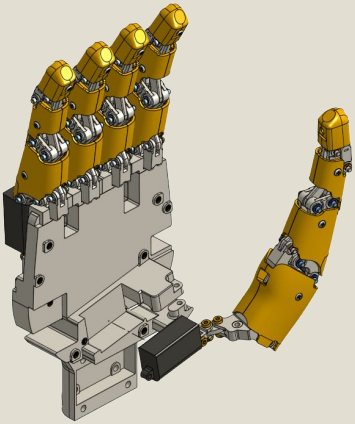

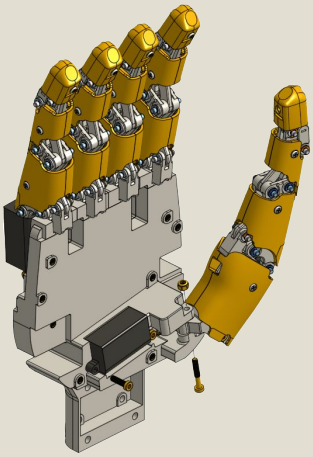

Main Assembly

5. Attach PCB to Hand Base using M3x6mm Socket Head

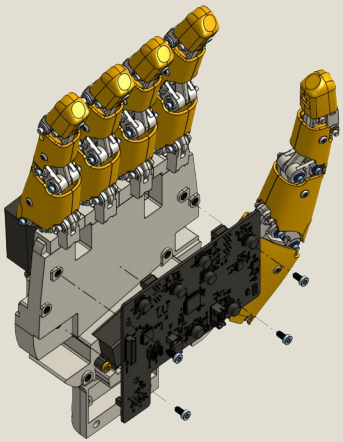

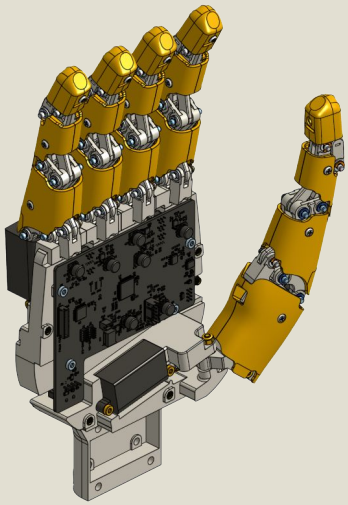

Main Assembly

6. Attach Back Shell and Palm Shell to Hand Base using M3x6mm Socket Head

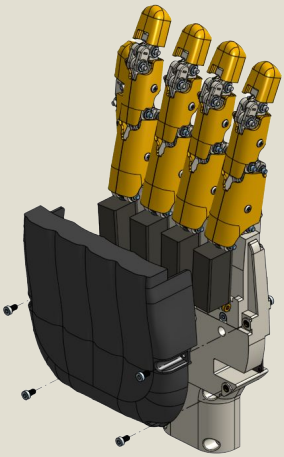

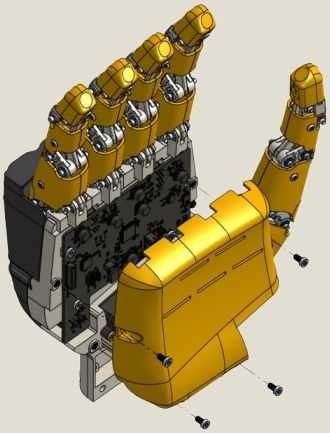

Main Assembly

7. Attach Wrist Mount to Hand Base using M4x20mm Socket Head and M4 Lock Nuts

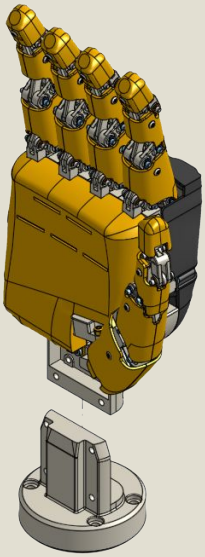

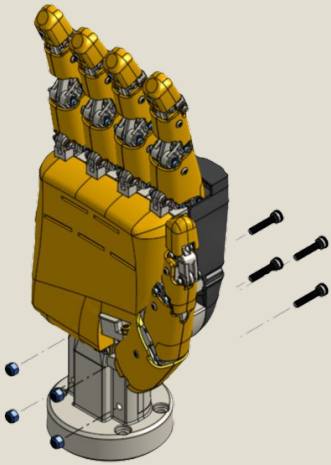

Main Assembly
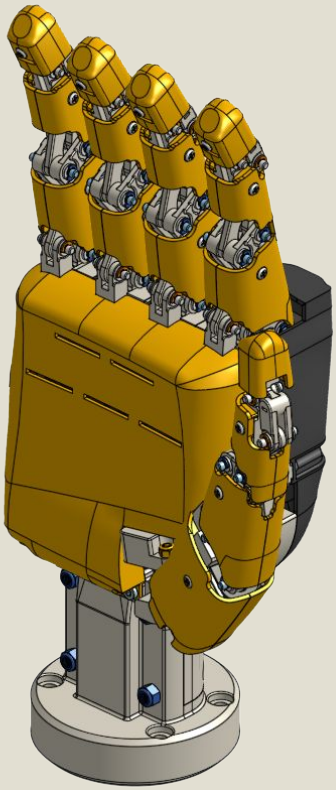
8. Complete BananaHand Assembly